iWAT200

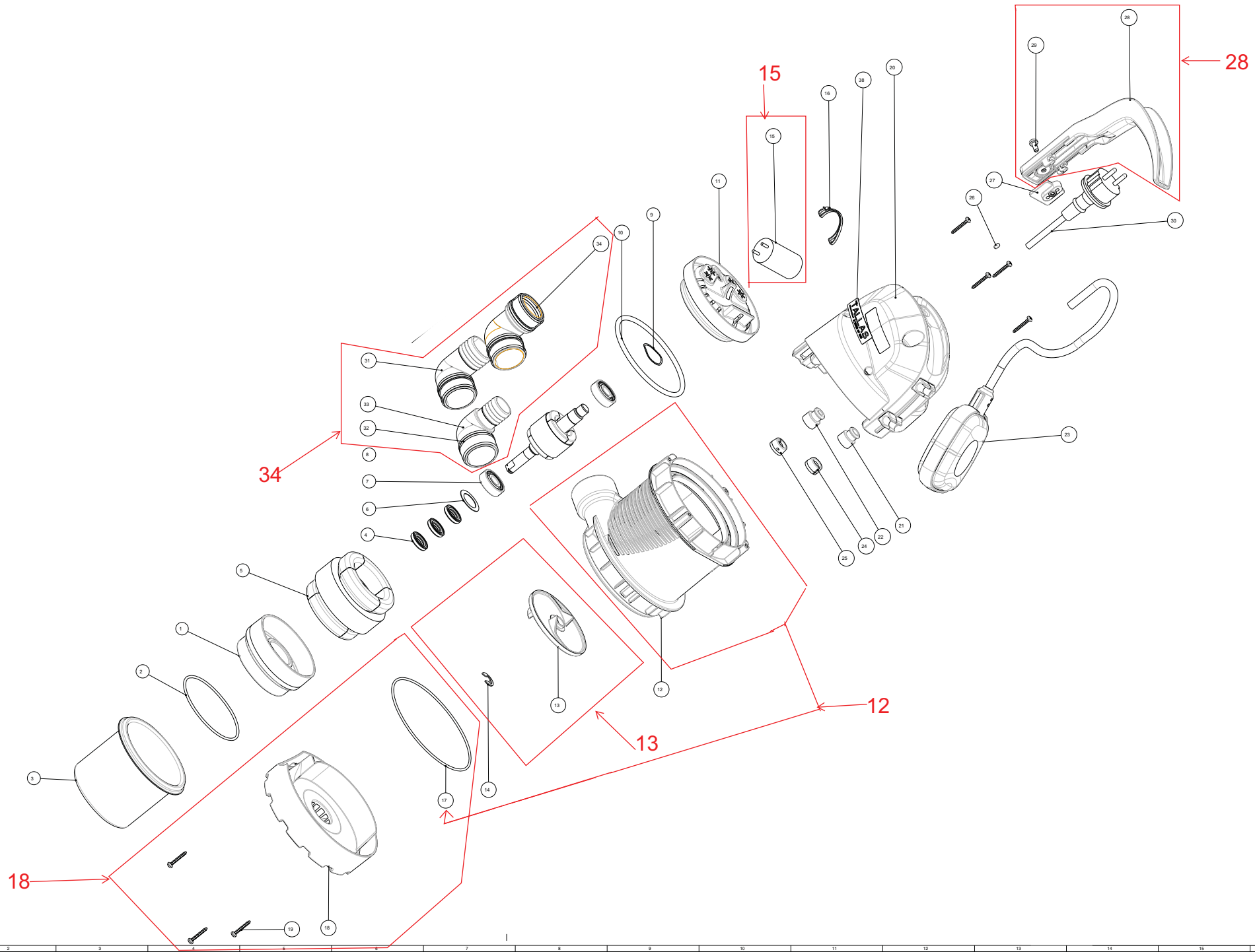
28
15
34
12
13
18
1
2
3
4
5
6
7
8
9
10
11
16
38
20
21
22
23
24
25
26
27
29
30
31
32
33
14
17
19

iWAT200

Ref. No.	SP code	SP description	Cant
12	SP00002204X	(SP)KIT PUMP BODY	1
13	SP00000881X	(SP)KIT IMPELLER	1
15	SP00002205X	(SP)KIT CAPACITOR	1
18	SP00002203X	(SP)KIT FILTER	1
28	SP00002217X	(SP)KIT HANDLE CW-DW	1
34	SP00002206X	(SP)KIT ELBOW	1