SANDRI GARDEN

ILLUSTRATED PARTS LIST

FAMOSA

TECNO

42 C

SG 42/I
serie 01

POS.	CODICE		Q.TA
1	396540	YELLOW	1
	396530	RED	1
	302820	BLUE 1	
	301990	ORANGE	1
2	144480		3
3	261610		3
4	295640		1
5	147910		3
7	184460		3
8	396550		1
9	147760		2
10	259870		1
11	259460		1
12	106440		7
13	109260		3
14	165110		1
15	259470		1
16	245240		5
17	200490		1
18	259530		4
19	144500		8
20	249450		1
21	200480		1
22	400440		4
23	459710		4
24	144460		4
25	144450		4
26	400770		4
27	101790		1
28	301280		1
29	302080		1
30	259800		1
31	259550		1
32	101370		1
33	459540		1
34	259420		1
35	260170		2
36	359410		1
37	4007000		1
38	495490		1
39	485520		1
40	160190		2

POS.	CODICE		Q.TA
41	144370		2
42	259490		1
43	259480		1
44	160180		2
45	101740		2
46	340060		2
47	2008490		2
48	B&S	286070	1
	B&S QUANTUM	285770	1
	TM	286080	1
	HO/GV100	285650	1
	HO/GCV135	286070	1
49	374450		1
51	161060		1
52	152120		2
53	140270		1
54	140310		2
55	459910		1
56	259500		1
58	446310		1
60	301110		1
61	140300		1
62	446320		1
63	B&S	245800	1
	B&S SPRINT 40	240500	1
	QUATTRO 40	240500	1
	TM	285680	1
	HO/GV100	261260	1
	HO/GCV135	284880	1
67	446330		2
68	142000		1
70	145250		4
71	165650		1
72	295640		1
73	195180		2
74	3008360		1
75	647880		1
76	691280		1
77	673450		1
OPTIONAL			
6	4023290		1
78	2022690		1
79	2022530		1

POS.	CODICE	Q.TA

6037120/024

SANDRI GARDEN

TECNO 42 C

SG 42/I
serie 01

CODIGO MOTOR ELECTRICO
2022280

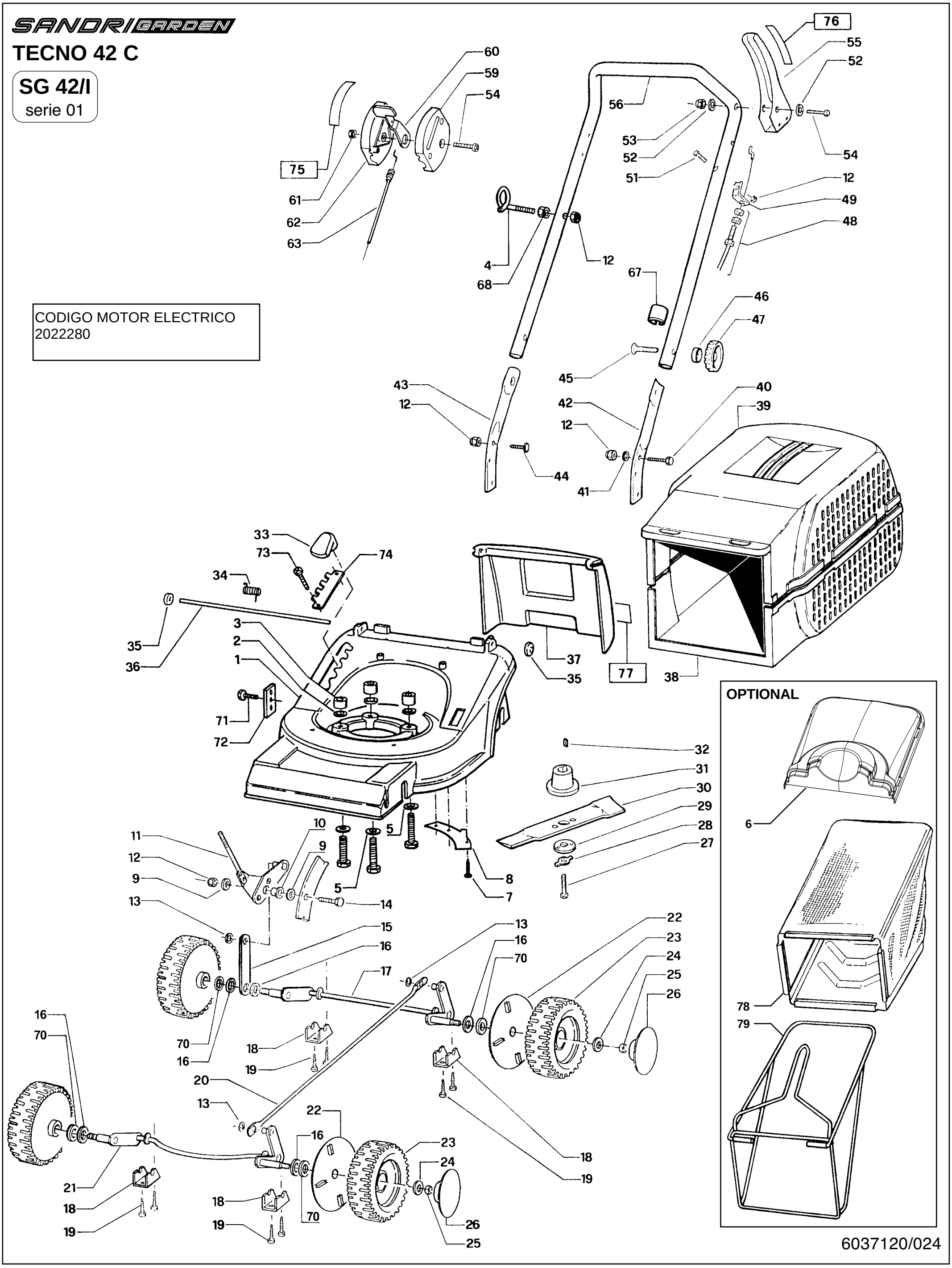

6037120/024